DISC CHECK VALVE CTT-80
Pmax: 63bar | Threaded BSP | ¼" – 4"

STAINLESS STEEL 3 PIECES DISC CHECK VALVE



TÜVRheinland PED/2014/68/UE

CE 1935/2004

ATTESTATION DE CONFORMITÉ SANITAIRE ACS

APPLICATION

Chemical and pharmaceutical industries, petrochemical industries, hydraulic installation, compressed air, drinking water, also for liquids and gas of group 1

FEATURES

3 pieces disc check valve female BSP. Removable central part for an easy maintenance.
Compatible with explosive atmosphere.

GENERAL CHARACTERISTICS

Range from ¼" – 4"
Connection threaded, female BSP cylindrical
Disc check valve with spring
Short length

Metal/metal tightness
(leakage rate according to API 598 standard)
Assembling: All positions
Respect the flow direction indicated by the arrow

STANDARDS

Manufacturer certified ISO 9001 : 2015 and ISO 14001 :2015

Pressure tests according to API 598, table 6

DIRECTIVE 2014/68/EU for liquids and gas of Group 1:
- 1/4"-1" : Article 4, §3 (SEP), no CE marking
- 1"1/4-2" : Risk Category II, CE0035 marking

BSP threaded cylindrical ends according to ISO 228-1

Construction according to EN 12516-1

Designing according to ASME B16.34

ATEX Group II Category 2 G/2D Zone 1 & 21
Zone 2 &22 (optional marking)

Certificate 3.1 on request

WORKING CONDITIONS

Maximum Working Pressure: 63 bar /Steam : max 11 bar
Working Temperature:- 20°C / +200°C.

DISC CHECK VALVE CTT-80
Pmax: 63bar | Threaded BSP | ¼" – 4"

CONSTRUCTION

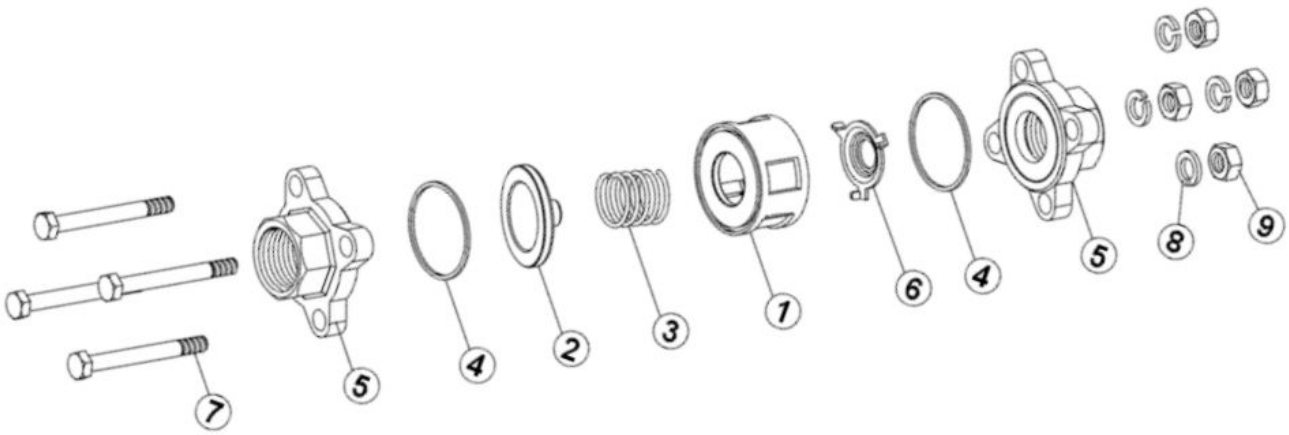

item	Part	Material
1	Body	EN 1.4408
2	Disc	ASTM A240-316
3	Spring	ASTM A240-316
4	Gasket (x2)	PTFE
5	Ends (x2)	EN 1.4408
6	Spring holder	ASTM A240-316
7	Screw	AISI 304
8	Washer	AISI 304
9	Nut	AISI 304
Id marking		**CTT80-**xxx**.177K7 PN63**

xxx – dimension type f.g. ½" = 015, 1"1/4 = 032

NOTE! „id marking" is not complete. In case of fully id please send the inquiry to email: info@mixflow.com.pl

DISC CHECK VALVE CTT-80
Pmax: 63bar | Threaded BSP | ¼" – 4"

Overall dimensions [mm]

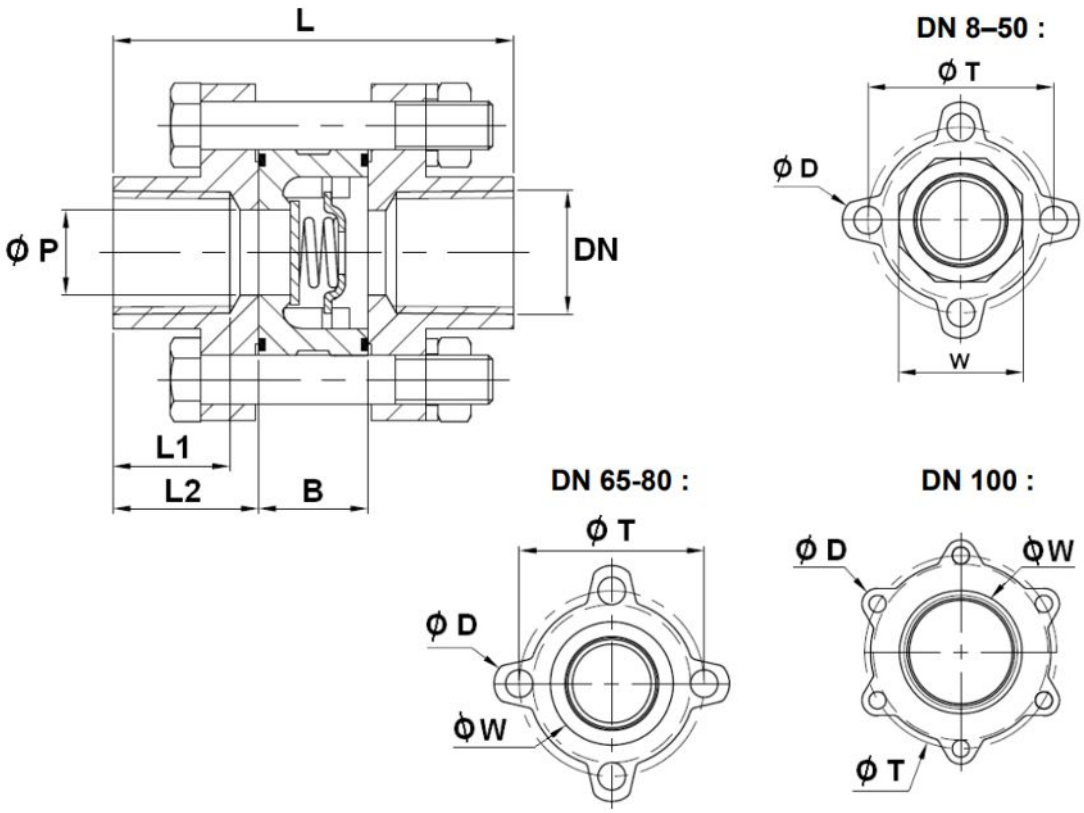

Dim	Ø P	L	L1	L2	B	Ø D	Ø T	W	Weight (Kg)
¼"	10	60	16	21	18	12	36.5	22	0.24
3/8"	10	60	16	21	18	12	36.5	22	0.24
½"	14	63	18	22	19	14	42.7	26	0.36
¾"	19	71	20	23.5	24	16	51.7	32	0.5
1"	25	81.5	20	26	29.5	16	58.7	39	0.73
1" ¼	31	91	23	29	33	18	72.7	49	1.18
1" ½	39	97.5	23	30	37.5	18	83.7	56	1.61
2"	49	117	27	35	47	18	98.7	69	2.45
2" ½	64	131.5	33	42	47.5	18	129	83	4.02
3"	78	143.5	35	44	55.5	18	153.5	100	6.23
4"	97	174.5	45	52	70.5	18	186.5	122.5	10.48

DISC CHECK VALVE CTT-80
Pmax: 63bar | Threaded BSP | ¼" – 4"

OPENING PRESSURE *(in mbar)*

DN	Vertical Position ascending fluid	Horizontal Position
DN 08	25 ↑	23 →
DN 10	25 ↑	23 →
DN 15	25 ↑	23 →
DN 20	25 ↑	23 →
DN 25	25 ↑	23 →
DN 32	27 ↑	24 →
DN 40	29 ↑	25 →
DN 50	29 ↑	25 →
DN 65	31 ↑	25 →
DN 80	32 ↑	26 →
DN100	33 ↑	27 →

PRESSURE / TEMPERATURE GRAPH

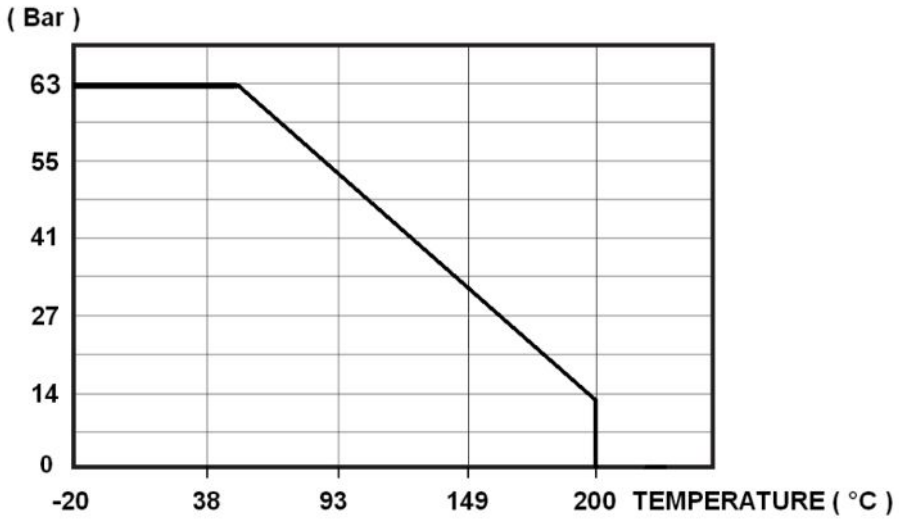

DISC CHECK VALVE CTT-80
Pmax: 63bar | Threaded BSP | ¼" – 4"

FLOW COEFFICIENT Kvs (m^3/h)

DN	¼"	3/8"	½"	¾"	1"	1" ¼	1" ½	2"	2" ½	3"	4"
Kvs (m3/h)	1.23	1.23	2.24	6.5	9.61	15.89	22.49	25.12	57.8	64.93	91.6

HEAD LOSS GRAPH

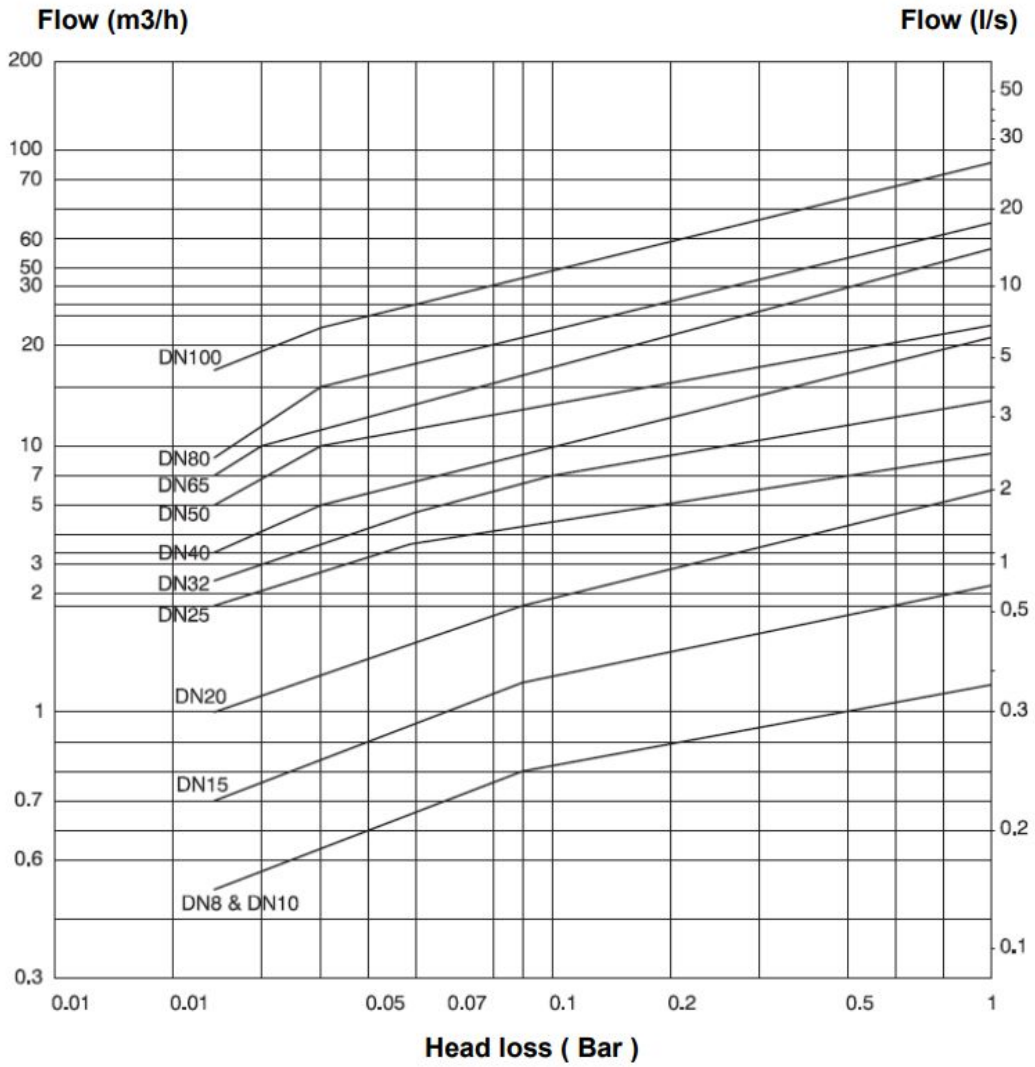

INDUSTRIAL VALVE SOLUTION
MIX FLOW
Grupa Baltina www.mixflow.com.pl

MIXFLOW – ENERGY
PL 80 – 067 Gdańsk,
ul. Równa 19/21
Tel: +48 58 676 55 39
info@mixflow.com.pl

The valves presented in this catalog are manufactured in the EU by Sferaco according to our specifications